QUARTZ (AMC 2530)

A general scanning couch with a cut-away section, allowing the transducer to be positioned more easily for some cardiac views.

Electric adjustments of height and back rest.

Designed to reduce OH&S risks and minimise manual handling.

*Pictured central wheel locking not included as standard. Available as an optional customisation.

5 Year warranty on electrical components

Lifetime warranty on frame and workmanship

Australian Made

Features

Adjustments of height (hi/lo) and back rest made with high quality electric actuators, reducing OH&S risks.

Supplied with foot control switch for hands free operation.

Permanent opening for cardiac scanning.

Carefully considered base design allows easy side access for practitioners and patients.

Access under couch for patient lifting devices.

Low minimum height the gives patients the ability to easily get on and off the couch.

125mm lockable wheels allow easy movement of the couch.

Basic specifications

Width: 700mm

Length: 1970mm

Back rest tilt: 75°

Height adjustment: 550mm -1000mm

Lifting capacity: 200kg

Wheels: 125mm lockable castors

Optional customisations

Hand switch control

Battery pack

Head cushion

Paper roll holder

Wide variety of fabric colours available

Padded swivel arm rest set

Standard arm rest set

Fold down side rails

Central wheel locking

Forme Medical

evolving with you

11 Frankston Gardens Drive
Carrum Downs VIC AUSTRALIA 3201
P: +61 3 9708 2661 F: +61 3 9708 2617
E: info@formemedical.com.au formemedical.com.au

QUARTZ (AMC 2530)

Side view

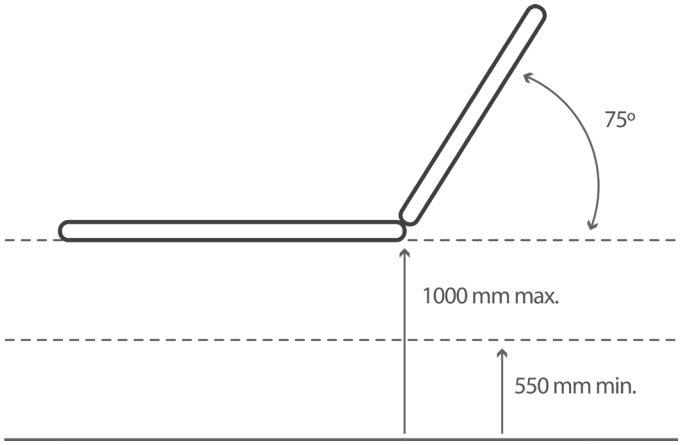

Top view

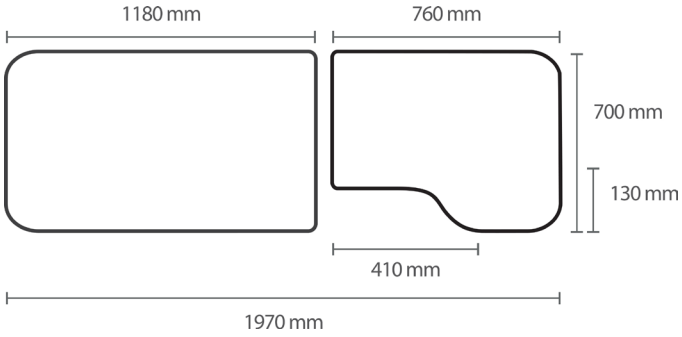

Optional customisations

Head cushion

Central wheel locking

Fold down side rails

Paper roll holder

Detailed specifications

Head section length: 760mm

Middle section length: N/A

Foot section length: 1180mm

Vinyl specifications:

UV resistant
Flame resistant
Easy to clean
Reduces growth of bacteria
Complies with AS 1530.3 standards
Variety of colours available

Foam specifications: 50mm foam

Frame material and colour:

Powder coated white frame
Australian steel

Wheel system:

Individual 125mm brake castors made by Tente

Drive actuators:

Back rest: Linak electric actuator system

Hi/lo: Linak electric actuator system

Electrical specifications: 230V 50-60 Hz

Electrical standards: IPX4 rating

Lift capacity: 200kg

Shipping weight: 70 - 85 kg

Shipping dimensions:

2130mm x 820mm x 700mm

Freight charges:

Not included in sale price.
Contact our sales representatives for a quote.

ARTG number: 208309

Suitable for use in:

- GENERAL EXAMINATION
- ULTRASOUND
- TREATMENT ROOMS
- GYNAECOLOGY & OBSTETRICS
- VASCULAR
- CARDIOLOGY
- DERMATOLOGY
- ENT
- PODIATRY
- COSMETIC SURGERY
- RENAL DIALYSIS
- CHEMO / DAY ONCOLOGY
- BLOOD COLLECTION
- DAY RECOVERY
- ICU
- DAY SURGERY
- SPECIALIST APPLICATIONS

Forme Medical | evolving with you

11 Frankston Gardens Drive
Carrum Downs VIC AUSTRALIA 3201
P: +61 3 9708 2661 F: +61 3 9708 2617
E: info@formemedical.com.au formemedical.com.au